Data sheet for three-phase squirrel-cage motor

Type	NAH132S-4-N IE3	Cod.		Mounting position	IM	B14
					IM	3601

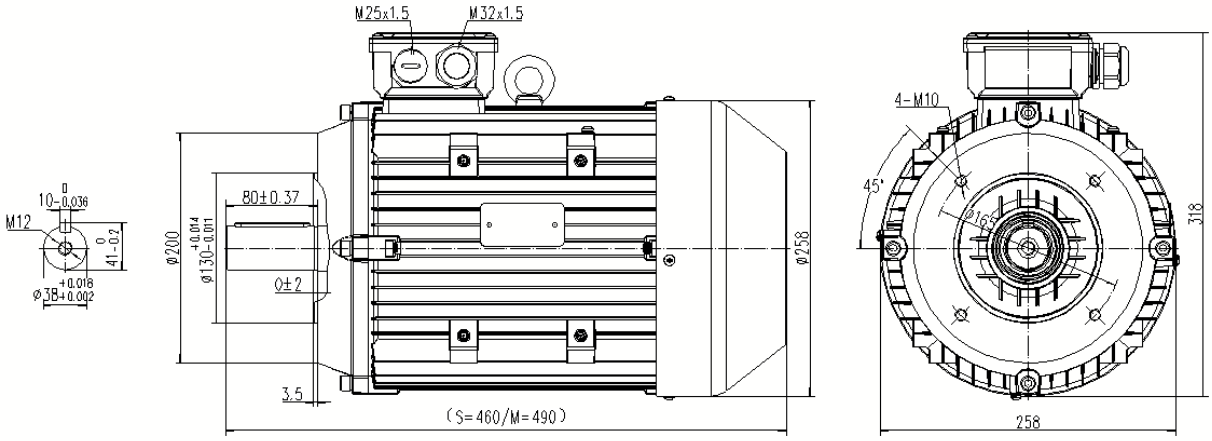

Electrical data			
Rated motor power	5.5		kW
Rated motor speed	1440		min^{-1} 50Hz
	1728		min^{-1} 60Hz
Rated motor frequency	50		Hz
Rated motor voltage(+/-10%)	400		VΔ/50Hz
	690		VY/50Hz
	480		VΔ/60Hz
	830		VY/60Hz
Rated motor torque	36		Nm (Mn)
Rated motor current	10.7	VΔ/50Hz	A (In)
	6.21	VY/50Hz	A (In)
Starting motor current	6.6		xIn
Starting motor torque	2.0		xMn
Breakdown motor torque	2.4		xMn
Starting			D.O.L.
Efficiency class	IE3		
Efficiency	50Hz	60Hz	
	90.0	91.7	100% load
	90.4	92.0	75% load
	90.3	91.9	50% load
Power factor cosφ	0.87	0.87	100% load

General data		
Frame size	132	
Mounting	B14	
Weight	47.3	kg
Casing material	Aluminum	
Protection	IP	55
Insulation class/Temperature rise	F	
Tropicalization	Yes	
Vibration class	A	
Duty	S1	
Direction of rotation	Bidirectional	
Method of cooling	IC	411
Cable entry	1-M25x1.5，1-M32x1.5	
Standards	IEC/DIN/ISO/VDE/EN	
Execute at Standard	IEC 60034-1	
Feet removable	Yes	
Paintwork	7030	C2 standard
Thermal protections		

Site conditions	
Ambient temperature	from -20°C to +40°C
Altitude above sea level	1000 m

Mechanical data						
Noise level	LpA	71	dB(A)	Bearing DE side	6308-2RZ ZV3	
	LwA	76	dB(A)	Bearing NDE side	6308-2RZ ZV3	
Moment of inertia	0.03294		kgm^2	Average bearing lifetime	40000	h
Bearings type			cgjf	Relubrication interval L1 DE bearing	life	h
Lubricants for bearings	See installation and maintenance manual			Relubrication interval L1 NDE bearing	life	h
				Compensation ring	DE SIDE	standard